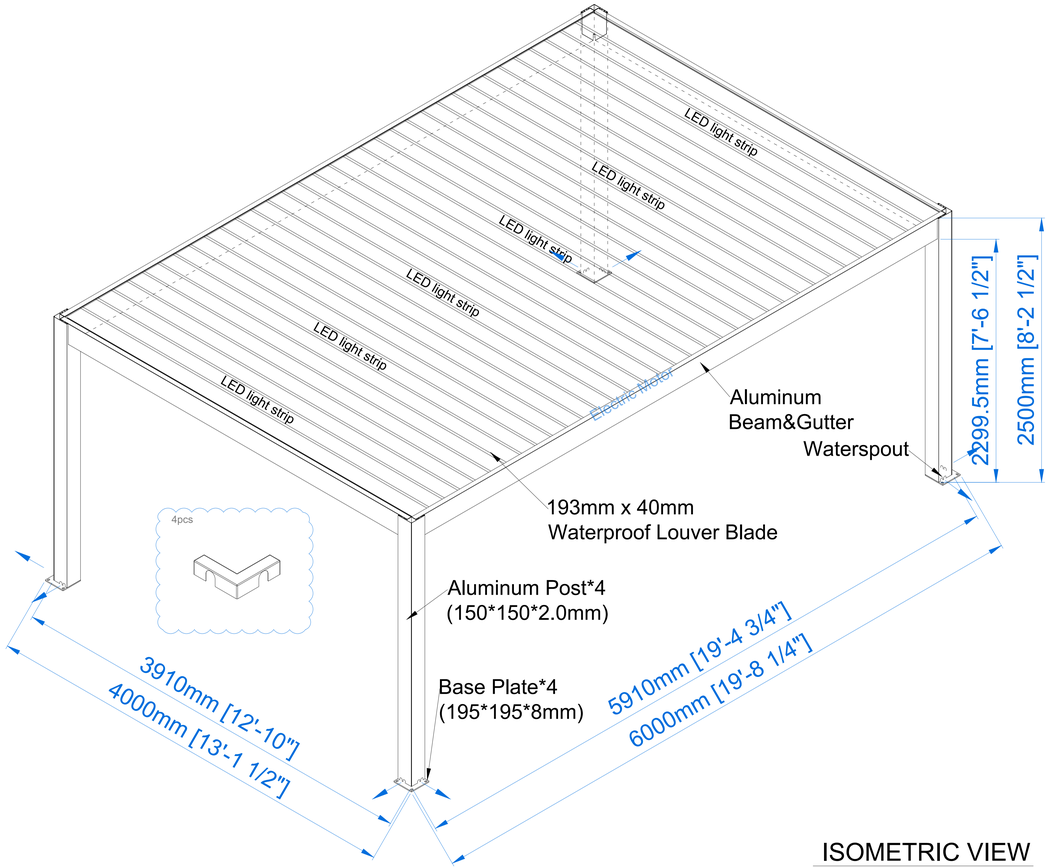

ISOMETRIC VIEW

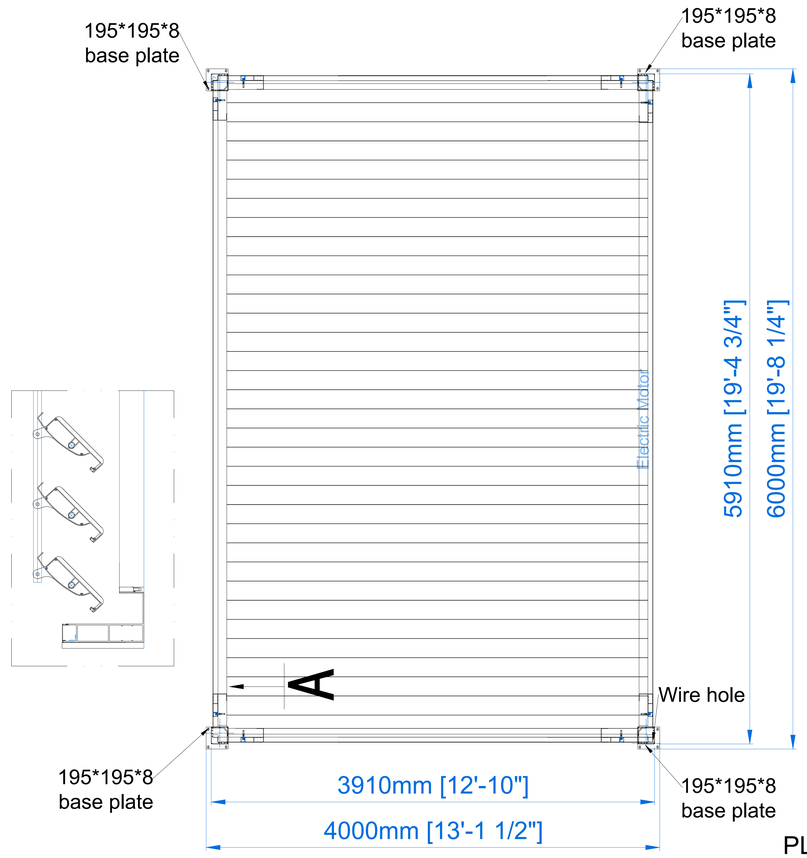

PLAN VIEW

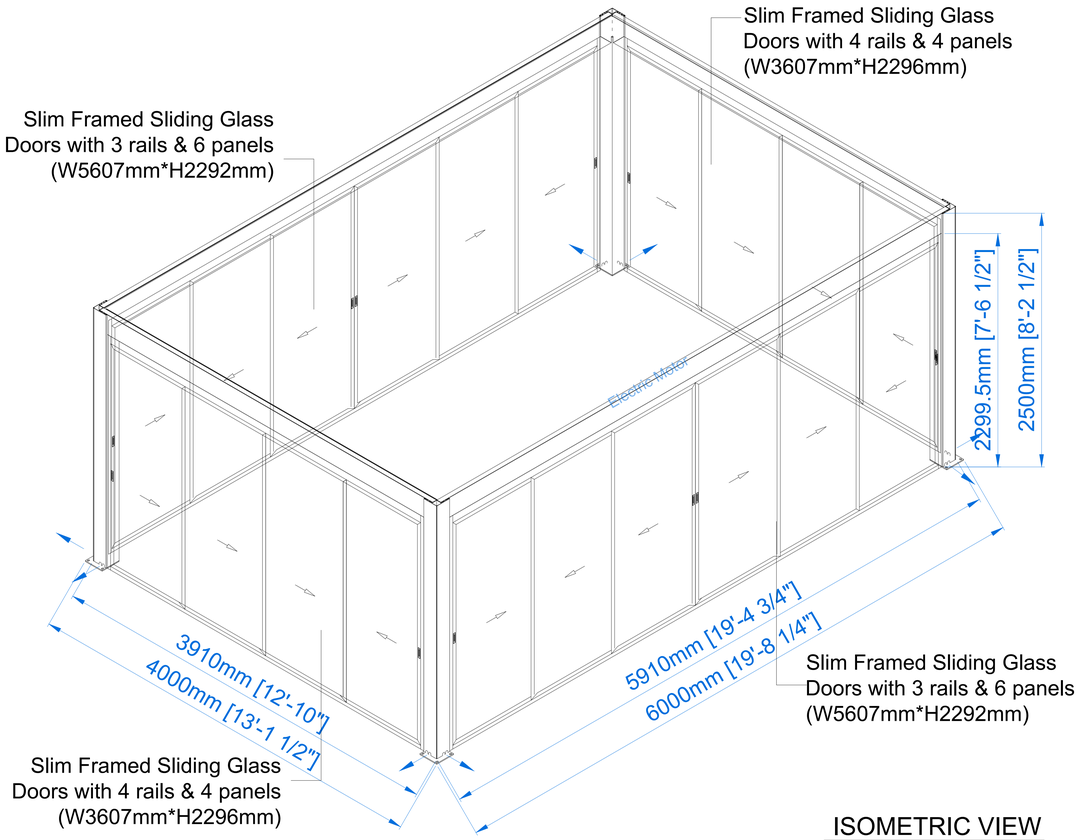

ISOMETRIC VIEW

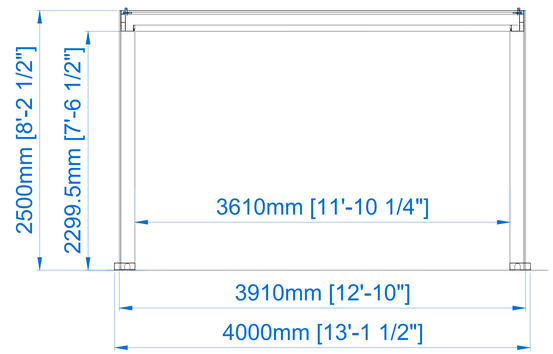

ELEVATION VIEW-1

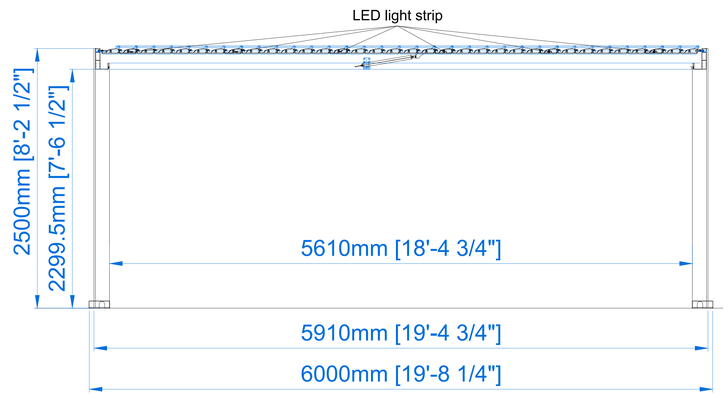

ELEVATION VIEW-2